Pirce Wall - White

IP20

Dimmerable: +◐−

DESIGN BY

Giuseppe Maurizio Scutellà

DESCRIPTION

Wall lamp in painted aluminum, a range extension of the Pirce series.

TECHNICAL DRAWINGS

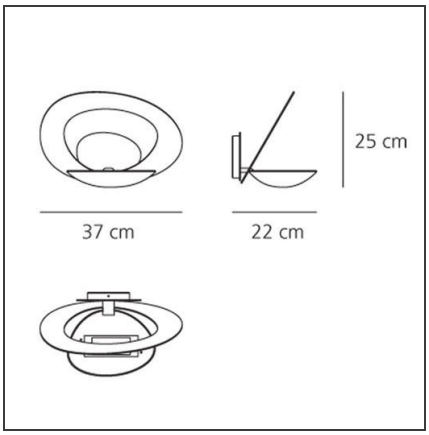

FEATURES

Article Code:	1240010A	**Material:**	Aluminum
Colour:	White	**Series:**	Design
Installation:	Wall	**Area contract:**	Residential
Environment:	Indoor	**Emission:**	Indirect

DIMENSIONS

Length:	cm 22	**Glow Wire Test:**	650
Width:	cm 37		
Height:	cm 25		

NOT INCLUDED SOURCES

Category:	HALO	**Color Rendering:**	1a
Number:	1	**Color temperature (K):**	3000K
Watt:	230W		
Lbs:	Qt-de12		
Socket:	R7s		
Duration (h):	2000h		

ALTERNATIVE SOURCES

Category:	LED
Number:	1
Watt:	11w
Delivered lumens output (lm):	1110lm
Type:	2
Socket:	R7s
Class:	A

LUMINAIRE

Watt:	230W	**CCT:**	2950K
Voltage:	220V-240V		