Empatia 26 Wall/ceiling

IP20

Dimmerable: +◐–

DESIGN BY

Carlotta de Bevilacqua, Paola di Arianello

DESCRIPTION

Empatia is inspired by the association between the great glass-blowing tradition and the LED technology of Artemide. High interest in the expression potentials of this material resulted into co-operation with master glass blowers to gain full control of the special suppleness of Venetian glass and to work on the balance between surface and light, between subtle densities and transparencies. Hence clear, pure craft objects, each of them unique in all respects. Transparency and opacity are wisely dosed to obtain a glass that reflects light without glaring and without losing efficiency. Hence optical device, whose heart is a high-performance LED-based light engine created separately from the glass emission body in favor of higher thermal efficiency and performance. Light is controlled with maximum yield and driven towards the glass diffuser through a transparent pipe with a very low absorption coefficient.

TECHNICAL DRAWINGS

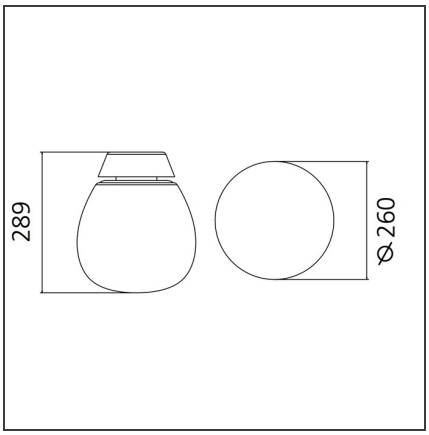

FEATURES

Article Code:	1818010A	**Material:**	Blown glass, methacrylate, aluminum
Colour:	White		
Installation:	Wall, Ceiling	**Series:**	Design

DIMENSIONS

Height:	cm 29	**Impact Resistance:**	N/D
		Glow Wire Test:	650°C

INCLUDED SOURCES

Category:	LED	**Color temperature (K):**	3000K
Number:	1	**CRI:**	90
Watt:	16W		
Type:	0		
Class:	A		

LUMINAIRE

Watt:	16W	**Delivered lumens output (lm):**	710lm
Voltage:	220-240V	**CCT:**	3000K
		Efficiency:	50%
		Efficacy:	44.36lm/W
		CRI:	90
		Dimmable Typology:	Push